ACHARYA INSTITUTE OF TECHNOLOGY
Library
Date.....
BANGALORE

USN | | | | | | | | | | |

18ME36A/18MEA306/18MA36

Third Semester B.E. Degree Examination, January 2020

COMPUTER AIDED MACHINE DRAWING

Time: 3 Hours Max. Marks: 100

Note:
1. Answer any one question from each of the parts A,B,C
2. Use **FIRST ANGLE** projection only.
3. Missing data if any may suitable be assumed
4. All the calculations should be on answer sheet supplied
5. All the dimensions are in mm
6. **Part C Assembled View should be in 3D and the other 2 views in 2D**

PART-A

Q. No. 1 A hexagonal pyramid sides of base 30 mm and altitude 70 mm is resting with its base on the HP and with a side of base parallel to the VP. It is cut by a cutting plane inclined at 35^0 to the HP and perpendicular to VP and is bisecting the axis. Draw its front view, the sectional view looking from the top and true shape of section. **(25 Marks)**

Q. No. 2 Draw the views of square headed bolt with nut for M30 X 100 mm diameter. **(25 Marks)**

PART-B

Q. No. 3 Draw two views of spigot and socket cotter joint of diameter of shaft 25 mm. **(25 Marks)**

Q. No. 4 Draw two views of a universal coupling of diameter of shaft of 25mm. **(25 Marks)**

PART-C

Q. No. 5 Figure: 1Shows the details of "Machine Vice". Assemble the parts to scale 1:1 and draw the following Views: a) Sectional front view b) Top view **(50 Marks)**

Q. No. 6 Figure: 2 Shows the details of "I. C Engine of Connecting rod". Assemble the parts and draw the following views: a) Sectional front view b) Top view **(50 Marks)**

VTU-16-01-2020 11:07:56am - AY - AY - AY - AY - AY - AY
16-01-2020 11:35:42am - AY - AY - AY - AY - AY - AY - AY - AY

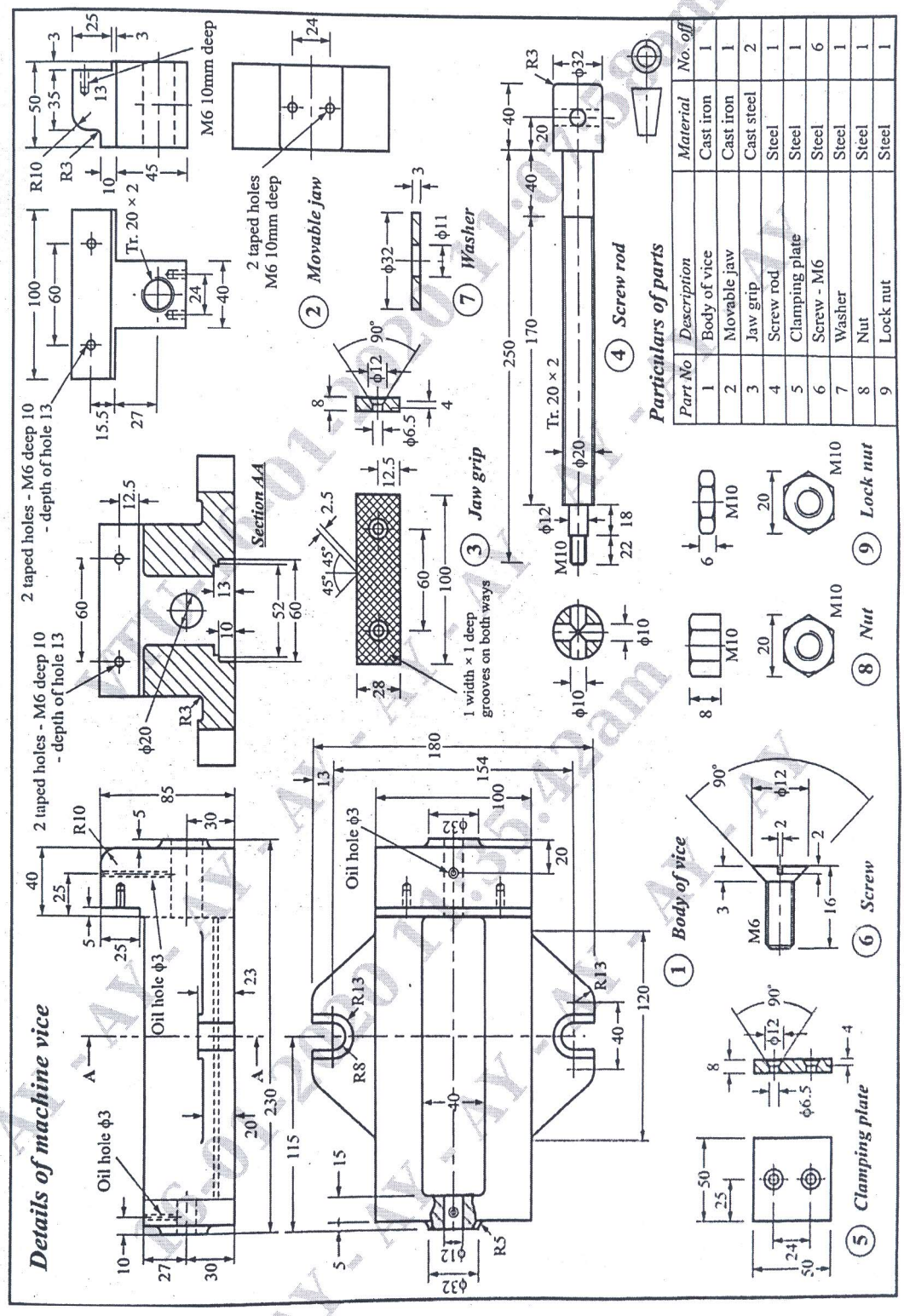

Figure 1: Details of Machine Vice

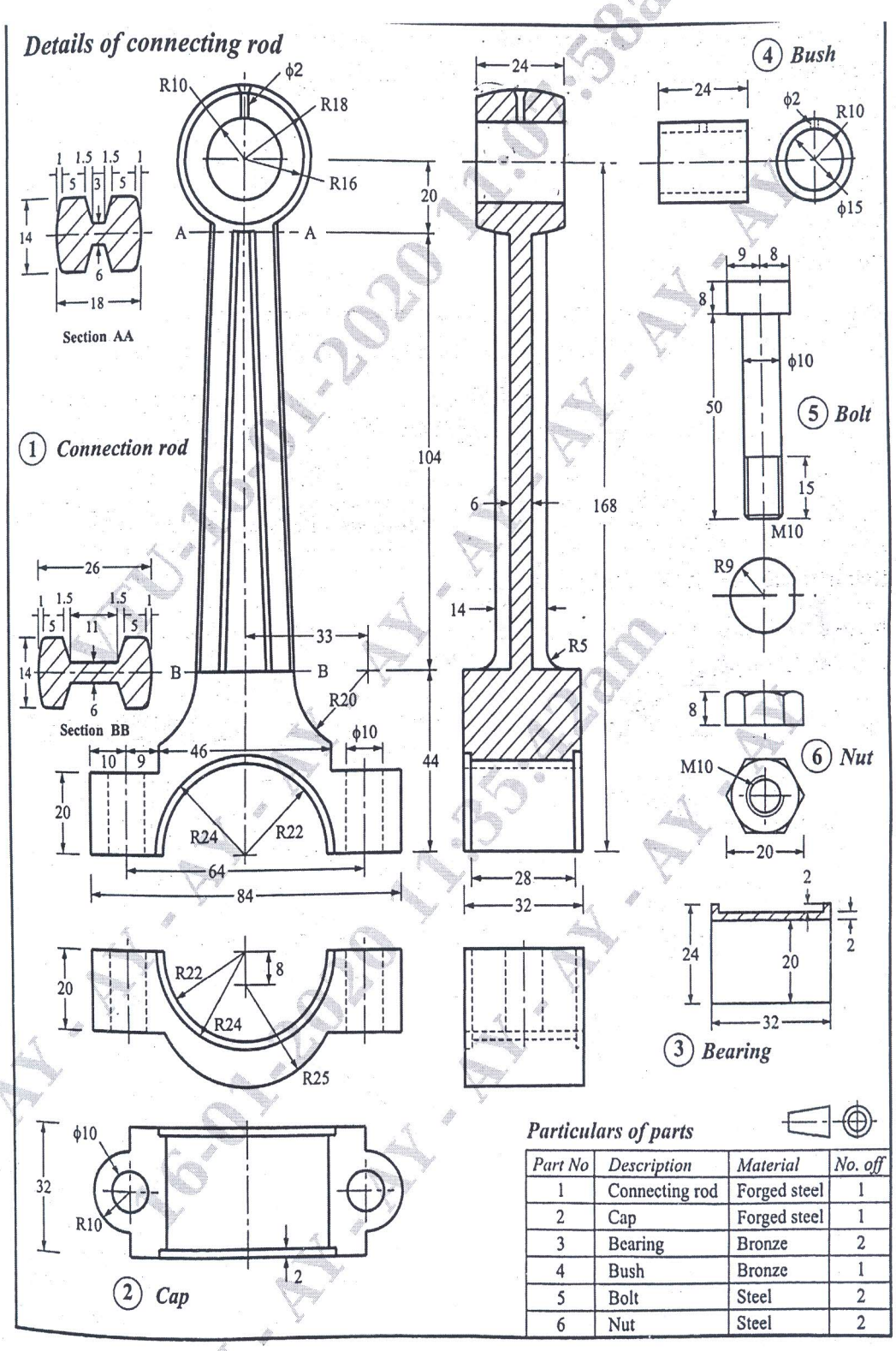

Part No	Description	Material	No. off
1	Connecting rod	Forged steel	1
2	Cap	Forged steel	1
3	Bearing	Bronze	2
4	Bush	Bronze	1
5	Bolt	Steel	2
6	Nut	Steel	2

Figure 2: Details of I. C Engine Connecting rod

AY - AY - AY -